pin位	2pin	3pin-A	3pin-C	4pin	5pin	6pin-72°	6pin-258°	6pin	7pin	8pin
X 值	1.50	1.50	1.50	1.00	1.00	0.90/1.00	1.00	1.00	0.90/1.00	1.00
图形	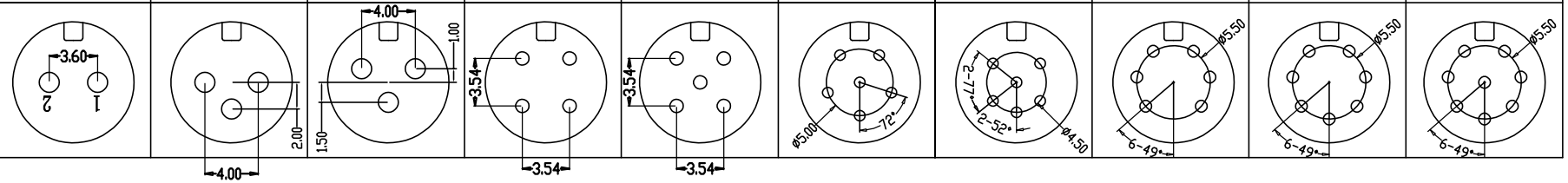									

Recommended Panel Cut-out

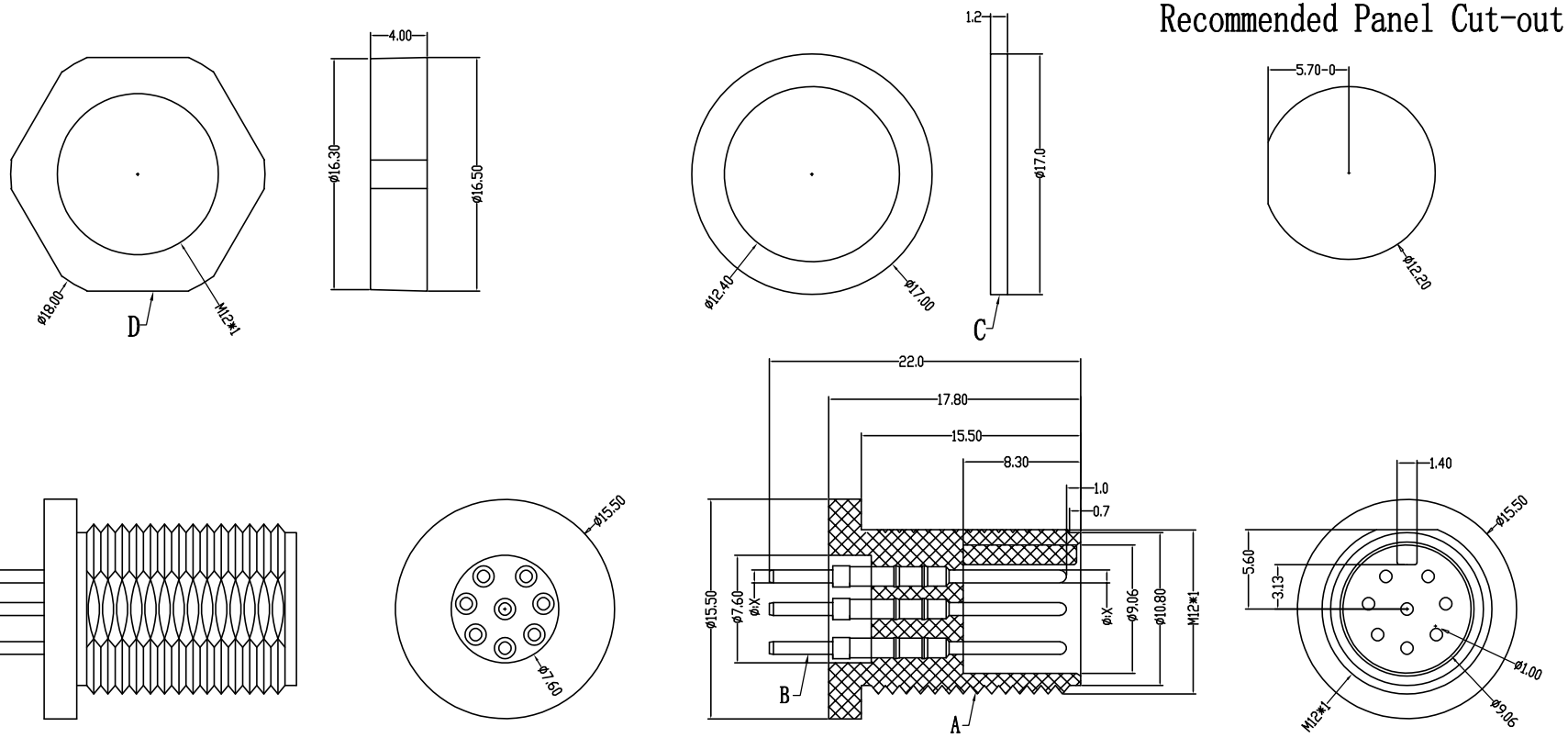

					PARTS	MATERIALS	TREATMENT	AMOUNT
				A	HOUSING	PA66+GF	BLACK	1
Engagement force	≤50N	Rated volage	2-5pin:60V 3-8pin:30V	B	CONTACT	BRASS	GOLD PLATED	2~8
Disengagement force	≥5N	Rated current	2pin: 7.5A 3-8pin:4A	C	SHIM	SILICA GEL	BLACK	1
Mechanical lifespan	≥500	Insulation resistance	≥1000M Ω	D	NUT	PA66+GF	BLACK	1
IP rating	IP67/IP68	Contact resistance	≤10m Ω	E				
Flammability	UL94 V-0	Operation Temperature	-40° C~105° C	F				

Dongguan Changjun ElectronicsCo.,LTD

东莞市昌骏电子有限公司

TOLERANCE
.xxx ±0.05
.xx ±0.10
.x ±0.30
x ±0.50
ANGLE ± 1°

TITLE: M12防水2~8P板端公头 前锁面板式Y-AXCJ1款

PART NO:	DRAWING NO.:			
CJ-M12YBB(2~8)-M01Q-AXCJ1	CP-M120317			
SHEET: 1 / 1	SCALE: 1 : 1	UNIT: mm	SIZE: A4	REV A/0
DRAWN: Xie Wenjun	CHECK: Long Jichang	DATE: 2023-04-21		